IY3660 – Applications of Cryptography

Week 3
Block ciphers

Elizabeth Quaglia
Information Security Group

Quiz time!

Overview of this lecture

- Introduction and definition of block ciphers
- Security
- Construction methods
- Examples of ciphers: DES, AES

Block ciphers

- Stream ciphers encrypt **streams** of bits
- Block ciphers encrypt and decrypt **blocks** of bits
  - Typically, n = 64 (e.g., DES, TDES) or n = 128 (AES)
- Encryption is under the control of a key K of size k bits
  - Typically, $k = 80$, 128 or 256

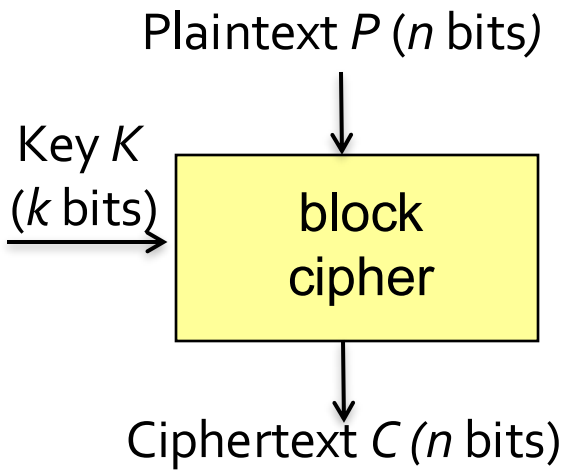

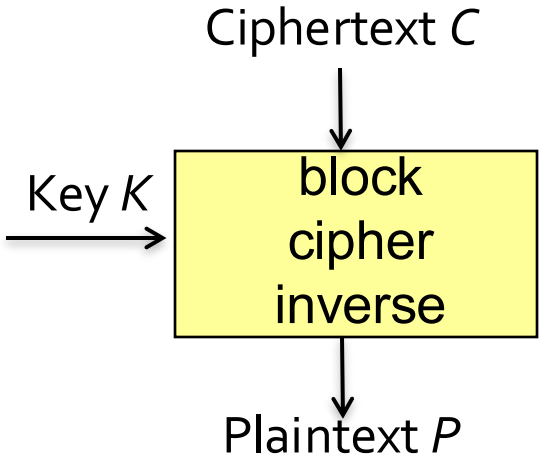

Block ciphers: definition

Definition:

A block cipher with key length k and block size n consists of two sets of efficiently computable *bijections*:

$$E_K: \{0,1\}^n \text{ --> } \{0,1\}^n \qquad \text{and}$$

$$D_K: \{0,1\}^n \text{ --> } \{0,1\}^n$$

such that D_K is the inverse of E_K for any K in $\{0,1\}^k$.

Notes:

- E denotes the ciphering, D the deciphering.
- Elements K in $\{0,1\}^k$ are called keys; there are 2^k possible keys.
- As defined, a block cipher can only encrypt n-bit blocks.

Applications of block ciphers

Block ciphers are versatile cryptographic primitives, used to construct:

- other block ciphers (e.g., E-D-E)
- encryption schemes (e.g., OCB, GCM)
- hash functions (e.g., Davis-Meyer mode)
- stream ciphers (e.g., CTR mode)
- message authentication codes (e.g., CMAC)
- pseudorandom bit generators (e.g., Fortuna).

Block ciphers: examples

block cipher	*n (block size in bits)*	*k (key size in bits)*
DES	64	56
3DES	64	112,168
AES	128	128, 192, 256
MISTY1	64	128
Camellia	128	128, 192, 256
SHACAL-1	160	128-512
SHACAL-2	256	128-512
CAST256	128	128, 160, 192, 224, 256
Threefish	256, 512, 1024	256, 512, 1024
KASUMI	64	128
PRESENT	64	80, 128
SIMON	32-128	64-256
SPECK	32-128	64-256

Standards for block ciphers

NIST (US National Institute for Standards and Technology):

- AES, Triple DES (3DES)

ISO/IEC 18033-3:2010 (conventional block ciphers)

- 64-bit block ciphers: 3DES, MISTY1, CAST-128, HIGHT
- 128-bit block ciphers: AES, Camellia, SEED

ISO/IEC 29192-2:2012 (**lightweight** block ciphers)

- 64-bit block cipher: PRESENT
- 128-bit block cipher: CLEFIA

Factors to consider in choosing a block cipher

- Key size (should be the primary indicator of security level)
- Block size (a secondary indicator of security level)
- Known cryptanalytic results
- Standardisation and support in crypto libraries
- Cost of implementation
  - Code size, number of transistors, size of state
  - Potential for sharing code with other crypto primitives (in constrained environments)
- Runtime costs
  - Energy consumption, power consumption, throughput
  - Key agility (ease with which key can be changed/set up)
  - Hardware support (e.g. AES instructions on Intel and AMD processors)
- Implementation security
  - Resistance to side-channel attacks (power, timing, …)

The block cipher zoo

- More new designs appear every year, but the vast majority will never be used in applications
- AES works well in most non-constrained applications, is widely supported in crypto-libraries, and has special hardware instructions on many modern processors
- **Rule of thumb: if you need a block cipher, use AES**
- Research problem in the past ~10 years: to produce strong block ciphers for constrained environments.
  - See NIST Lightweight Cryptography competition: https://csrc.nist.gov/projects/lightweight-cryptography
  - Finalist Ascon was announced for standardisation in 2023.

Block cipher construction methods

Constructions methods

- **Goal of a block cipher designer**: construct a *key-dependent bijection* E_K on n-bit strings (i.e., 2^n elements), which can be *efficiently computable (*both the function and its inverse)…
- … and yet for a key *K* drawn at random, the bijection E_K cannot be distinguished from a randomly selected permutation on 2^n elements
- there may be other specific design goals:
  - low area in hardware
  - super-fast in software
  - low energy consumption
  - suitable for *advanced* applications, etc.

Common approach: iteration of a simpler*, key-dependent function several times.

*simpler to analyse, implement, etc

Iterative block ciphers

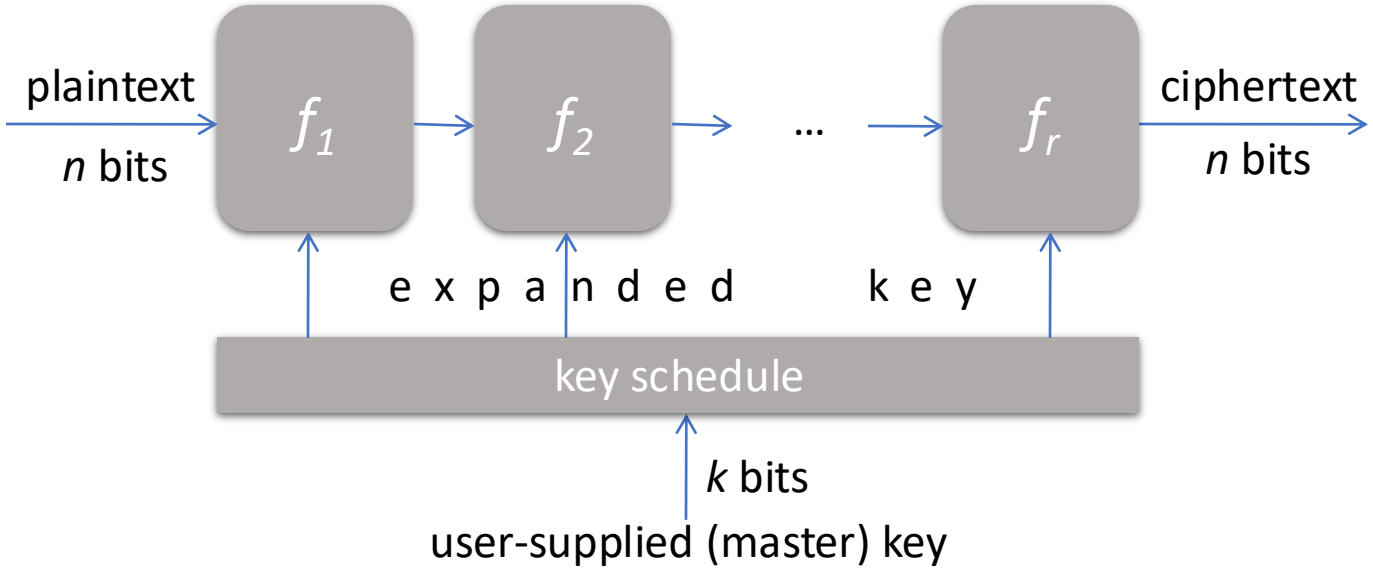

An iterative block cipher consists of r consecutive applications of simpler key-dependent function (**rounds**)

$$f = f_r \circ f_{r-1} \circ \ldots f_2 \circ f_1$$

Iterated block cipher construction

Iteration of a simpler, keyed round function is almost universal

- Gain cryptographic strength through iteration:
  more rounds = stronger algorithm
- Try to trade off speed and security:
  more rounds = slower algorithm

New problem: how to design this simpler, key-dependent round function

- Common approach: divide n-bit input string into shorter substrings, apply especially selected transformations to substrings, and mix things…
- To make it key-dependent, add round keys to round state

Round function examples

- Feistel cipher: splits block into two halves of *n/2* bits each, and uses a particular method for operating on the halves to build the round function
  - Eminent example: DES
- SP network: each round function is built from a substitution (*non-linear*) step followed by a permutation (*linear*) step
  - Directly implements Shannon's confusion and diffusion principles
  - Eminent example: AES

Examples of block ciphers
DES – Data Encryption Standard

DES – Data Encryption Standard

- DES has existed for over 40 years
- Very widely used block cipher
  - 3-DES variant in the financial sector
- Unbroken in the sense that no practical cryptanalysis of the full-round cipher
- Broken, in the sense that exhaustive key search is now feasible!
- DES block size (64 bits) is too small for comfort
- DES design techniques are however basis for other block ciphers

Birth of DES

- May 1973 — NBS Call for proposals
  - NBS: National Bureau of Standards (→ *NIST*)
  - Results disappointing
- August 1974 — Second call for proposals
  - IBM submission, lead designer Horst Feistel
- March 1975 — Algorithm published
- August 1976 — Draft standard published
- January 1977 — FIPS 46 (official standard) published

History of DES

- DES was re-affirmed as standard
  - 1988 as FIPS 46-1 and 1993 as FIPS 46-2
- Withdrawal of DES
  - 1988 NSA withdraws endorsement of DES
  - 1998 DES was not re-affirmed by NIST
  - 2005 withdrawn by NIST
- DES incorporated into other standards
  - ANSI X3.92 and ISO 10126-2
  - DES called Data Encryption Algorithm (DEA)

DES is a Feistel cipher

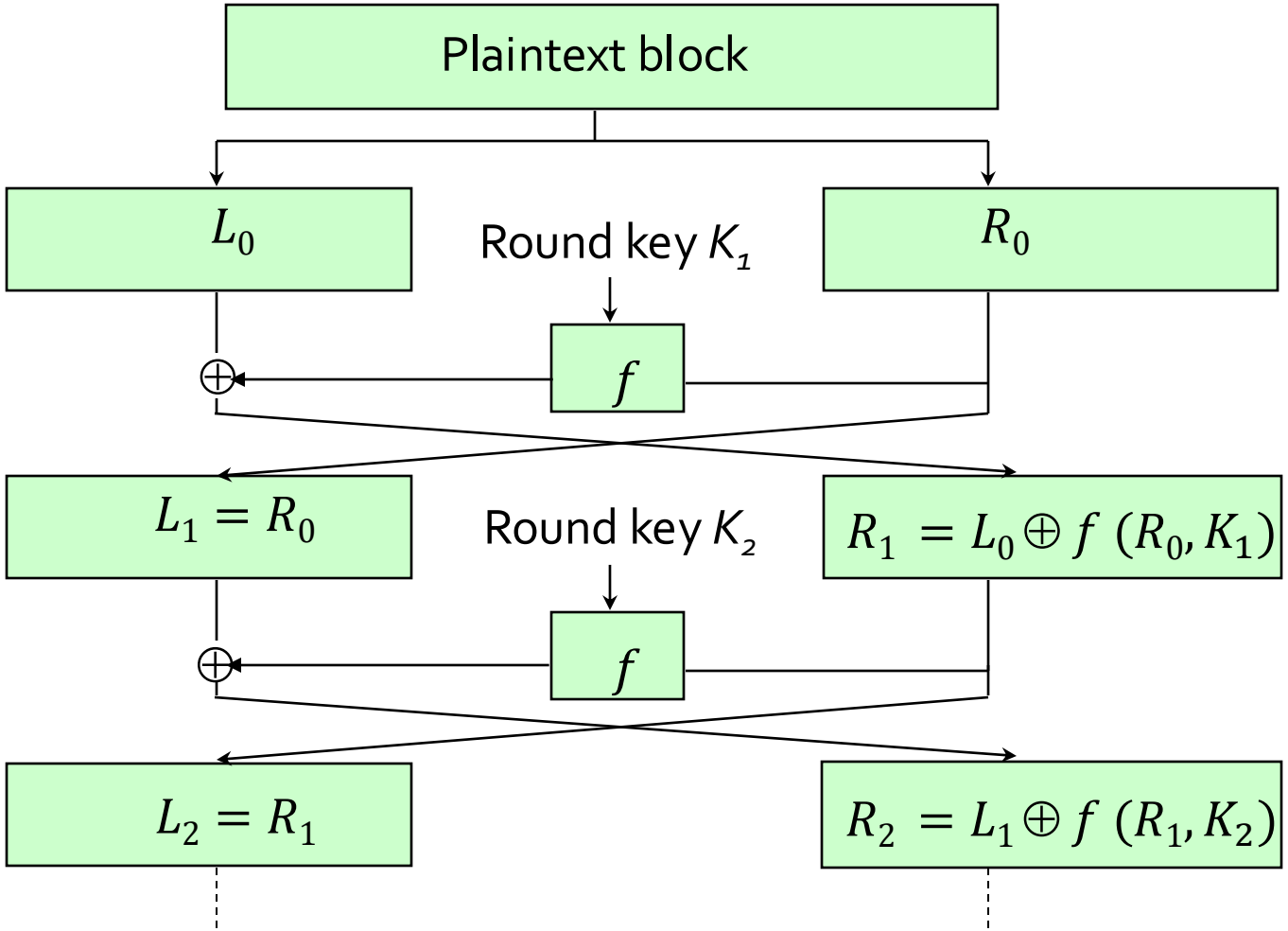

PS: the Feistel structure means that even if the function f is not a permutation, the overall construction is still a bijection – that is, decryption does not require that f has an inverse!

Features of DES

- Block size is 64 bits, split into two 32-bit halves *L* and *R*
- Key size 56 bits, with 16 rounds, and 16 round keys, K_1, , K_2,…, K_{16}
- 32-bit-to-32-bit function *f* is composed of expansion, substitution and permutation operations
- DES design is based on bit manipulation
  - Tends to give good hardware performance
  - Generally slower software performance

Detailed structure of DES

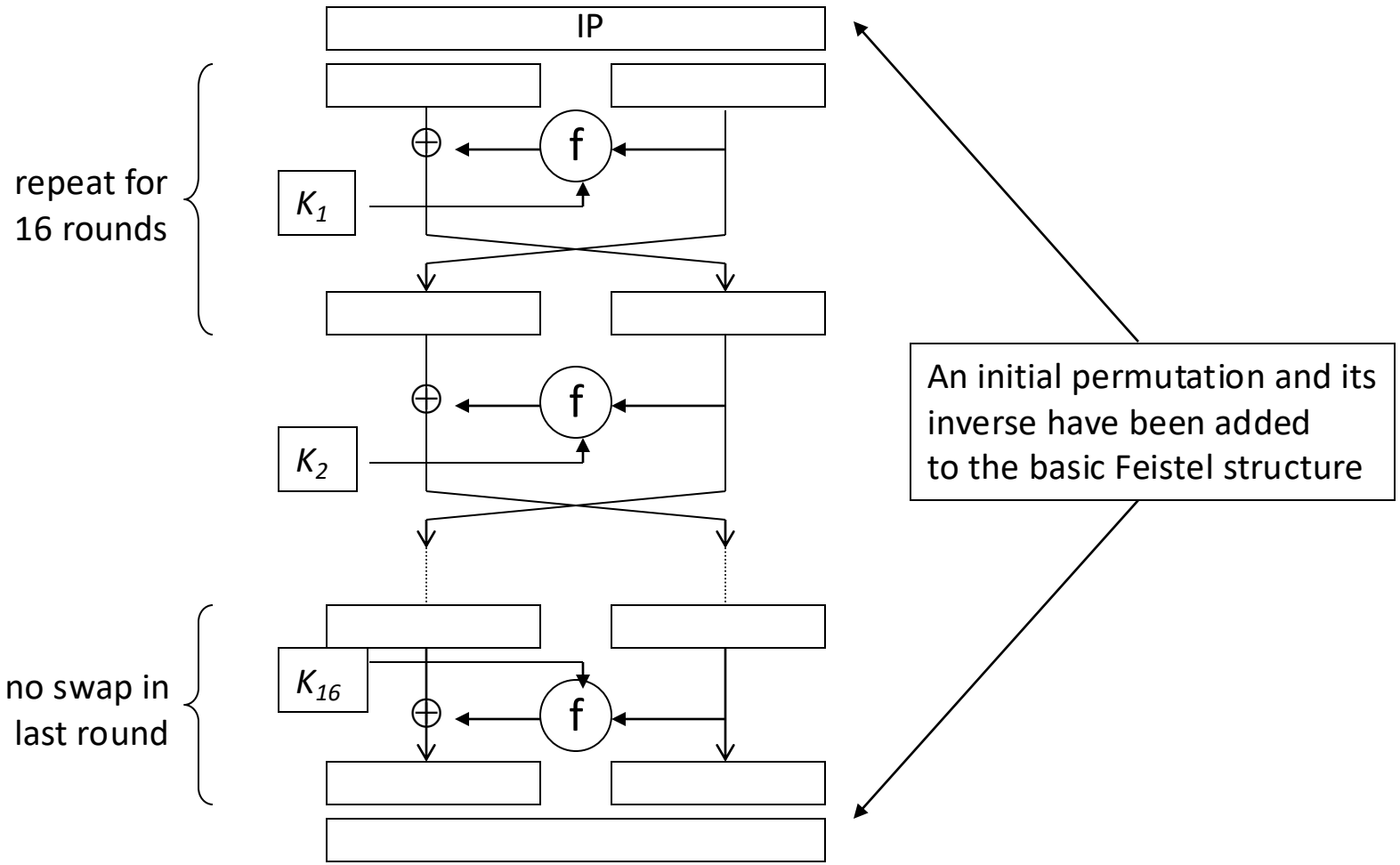

DES internals

- The function *f* used in the Feistel construction is a 32-bit to 32-bit map, consisting of 4 steps:
  - E: Expansion (from 32 bits up to 48 bits by repeating certain bits)
  - XOR with 48-bit round key K_i
  - S-boxes (8 different **substitution boxes** named S1,..,S8; each is 6-bits to 4-bits; small and implementable via table look-ups)
  - P: Bit permutation (permuting the 32 bits, tricky in software)

DES internals: the f function

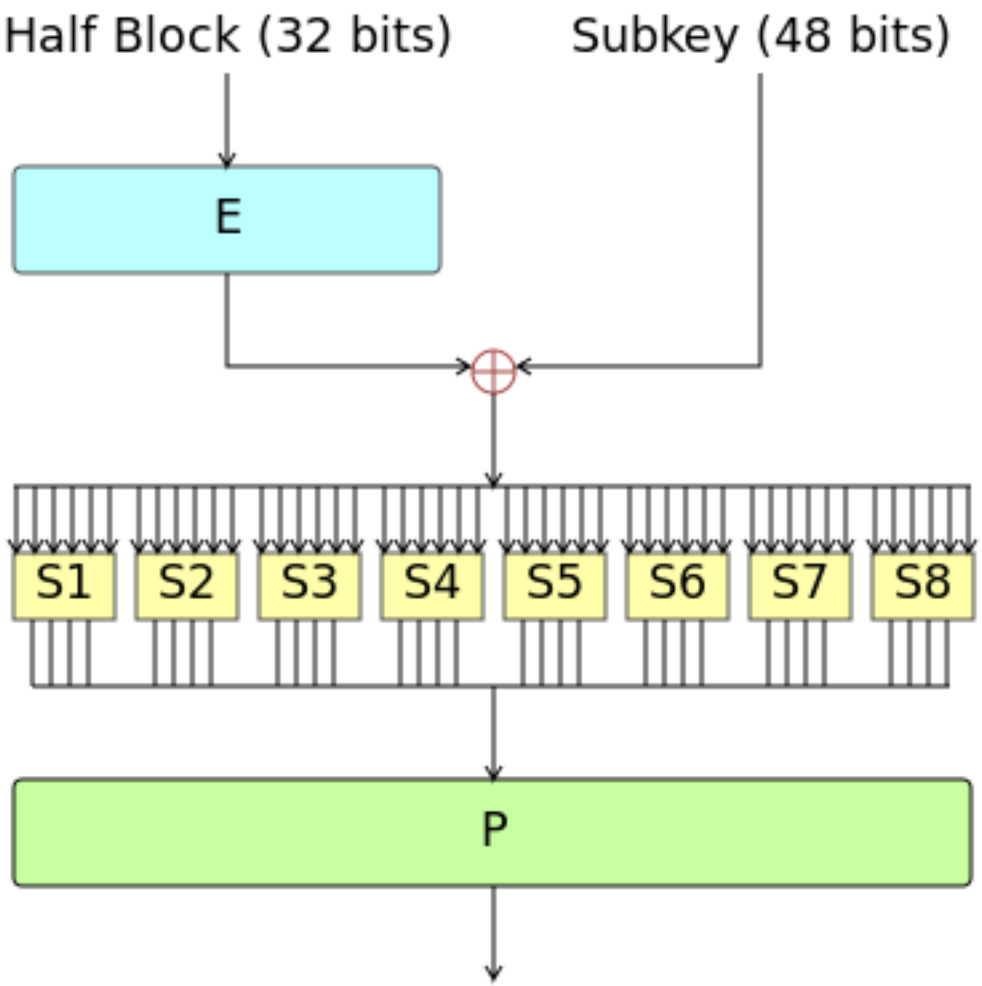

Source: wikipedia

Analysis of DES

- Many specific attacks on DES and weaknesses in DES have been found
- But the main issue was the small key size: 56 bits
- Not enough security, even in the 1970s
- Exhaustive key search requires, on average 2^{55} block cipher operations
- Estimated costs of exhaustive key search have decreased over time:

	Year	Cost	Time
Diffie+Hellman	1977	$20,000,000	20 hours
Wiener	1993	$1,000,000	7 hours
BSA	1995	$300,000	6 hours
Wiener	1998	$1,000,000	70 min.
Distributed.net	1997	≈ $0	140 days
EFF	1998	$250,000	9 days
Distributed.net+EFF	1999	$250,000	3 days

DES cracker

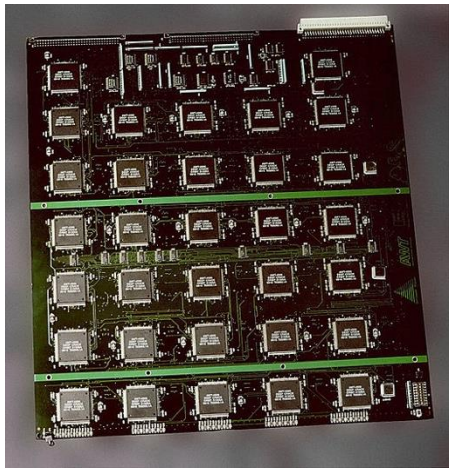

- Eventually, the Electronic Frontier Foundation (EFF) built a DES cracker to implement exhaustive key search
  - 37,000 specially designed search units
  - Development cost estimate in 1993 was $500,000
  - DES cracker tests around 92×10^9 keys/sec
- 1999 DES search effort using DES cracker:
  - 1999 effort tested keys at the rate of 245×10^9 keys/sec
  - Around 62% of computational effort came from the Internet
- Today:
  - Use an FPGA, crack keys in a day for around $10k
  - Use cloud computing resources (still non-trivial)

Triple-DES

- Several different proposals for 3DES:

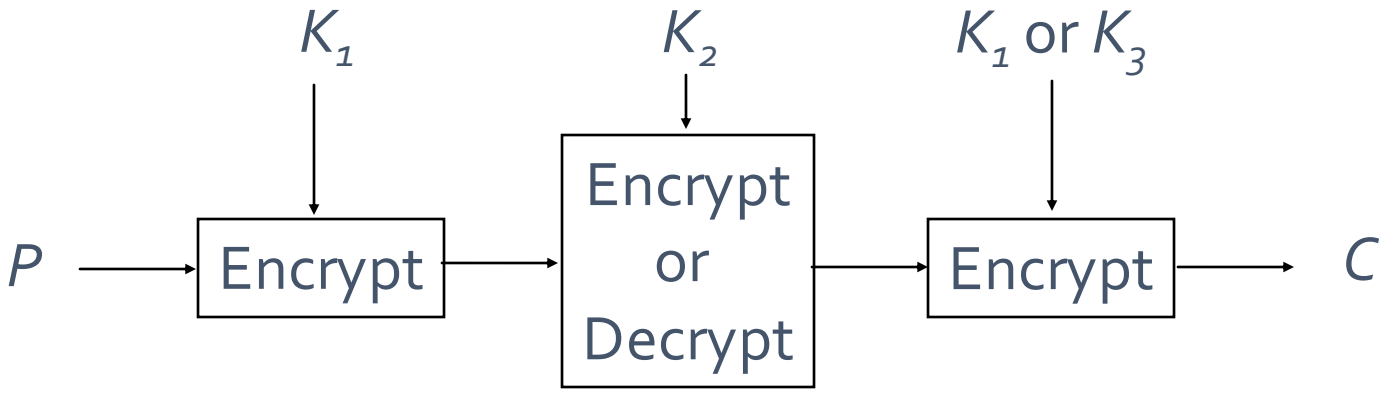

- Typically 3DES uses 2-key or 3-key EDE.
- All variants slow
- Double DES does not offer much additional security over single DES
- Even 3DES does not offer 3 x 56 bits of security!

DES conclusions

- DES is a very well-designed cipher
- It has been subjected to an enormous amount of cryptanalysis
- The best **feasible** attack is still exhaustive search
  - More than 40 years after design
- But exhaustive search is now practical even for a moderately resourced adversary
  - Mostly due to the effect of Moore's law
- Block size is uncomfortably small for many applications
- As early as the early 1990s, it became accepted that alternative block cipher designs were needed

Examples of block ciphers
AES – Advances Encryption Standard

The AES process

- A multi-year competition to search for a DES replacement
  - Run by NIST, starting in 1998
- Advanced Encryption Standard (AES), to offer tangible enhancements over DES
  - Provision of a single block cipher
  - Available royalty-free worldwide
  - Public and flexible design
  - At least as secure and fast as two-key triple DES
- Fifteen submissions resulted in five finalists
  - Mars, RC6, Rijndael, Serpent, and Twofish
- Rijndael chosen as *the* AES in 2000
  - AES published as FIPS 197 in November 2001
  - Modes of operation then published (see soon)

AES

- Designed by Joan Daemen and Vincent Rijmen
  - Belgian cryptographers
  - Originally called *Rijndael*
- Block size of 16 bytes (128 bits)
  - It is a byte-oriented cipher
  - Note: Rijndael also allowed for 192- and 256-bit blocks (not included in the standard)
- Key size of 16 bytes (128 bits)
  - Key lengths of 192 and 256 bits also defined
  - Terminology: AES-128, AES-192, AES-256
- Different design principles from DES
  - AES is a Substitution-Permutation Network (SPN)
- Faster and stronger than DES

SPN: substitution-permutation network

- In an SPN, a round consists of three basic operations:

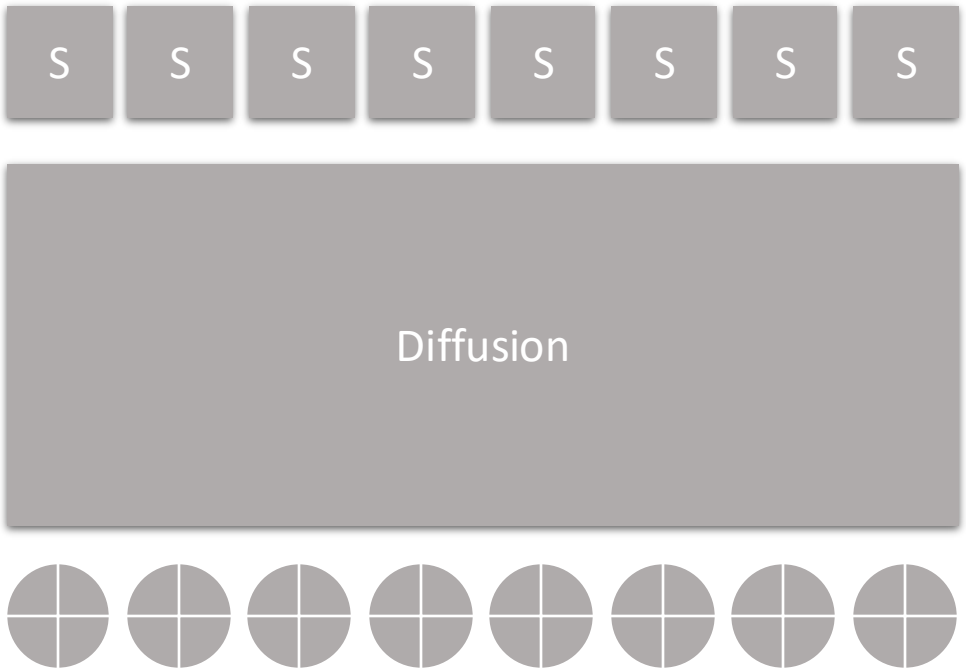

S-box: substitution box (*local* nonlinear function)

Diffuse the **local** nonlinearity across the block via permutation

XOR with a secret subkey

- Design used in several ciphers: AES, Serpent, Present, Camellia, KASUMI…

Simple SPN (16-bit block cipher)

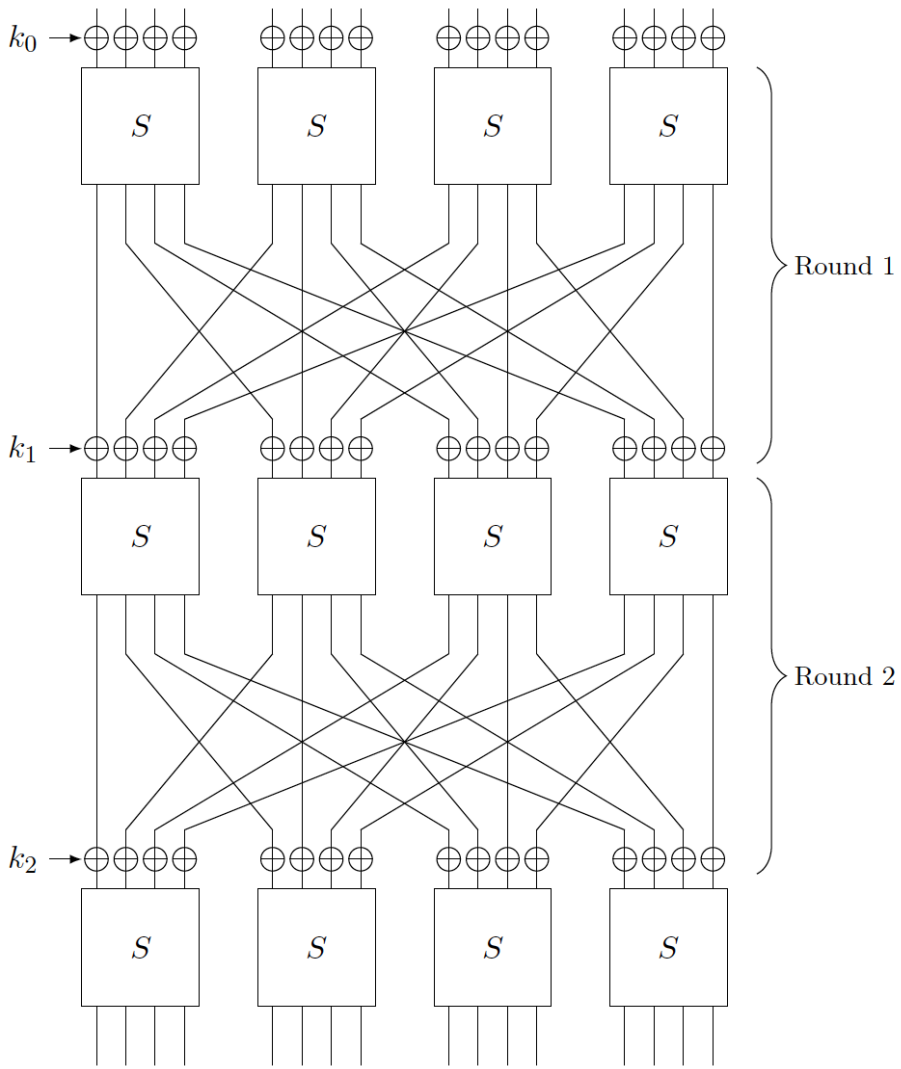

Bitwise XOR addition of secret key
Four 4-bit S-boxes applied in parallel, S

Diffusion layer = a bit permutation

Bitwise XOR addition of the round key
Four 4-bit S-boxes applied in parallel, S

Diffusion layer = a bit permutation

Bitwise XOR addition of the round key

AES structure

- The AES internal state has 16 bytes
  - Usually described by a 4x4 matrix of bytes

B_0	B_4	B_8	B_{12}
B_1	B_5	B_9	B_{13}
B_2	B_6	B_{10}	B_{14}
B_3	B_7	B_{11}	B_{15}

AES structure

- AES round applies 4 distinct operations on the state matrix:
  - `SubBytes` operation: byte-wise substitution, typically implemented as LUT
  - `ShiftRows` operation: shifts rows of the state matrix
  - `MixColumns` operation: linear transformation to mix columns
  - `AddRoundKey` operation: byte-by-byte XOR of round key

- AES (128-bit key) has 10 rounds
  - Initial `AddRoundKey`
  - No `MixColumns` in last round (simplifies definition/implementation of decryption)

- 12 rounds for AES-192 and 14 rounds AES-256
- Decryption requires inverse of these operations
- Round key schedule can be slow, so one may want to avoid frequent rekeying

AES operation

AES Encryption over n Rounds	
AddRoundKey	
SubBytes	↑
ShiftRows	for $n-1$
MixColumns	rounds
AddRoundKey	↓
SubBytes	
ShiftRows	final round
AddRoundKey	

	key, bit	block, bit	n, # rounds
AES-128	128	128	10
AES-192	192	128	12
AES-256	256	128	14

Let’s see how AES works!

Cool video on AES:
https://www.youtube.com/watch?v=gP4PqVGudtg

AES security

NSA reviewed AES

- Approved for SECRET with any key length
- Approved for TOP SECRET with 192 or 256 bit keys

Cryptanalysis

- Since standardisation (2001), AES has been subject to intense analysis
- Several attacks in *related key* setting or against **reduced-round** variants
- First key recovery attack in 2011: workload of $2^{126.1}$ against 128-bit key version

Side-channel analysis

- Bernstein 2005: remote cache timing analysis against AES implementation in OpenSSL, requiring 200M chosen plaintexts and precise timing information
- Osvik, Shamir, Tromer 2005: same-machine (co-resident) cache-timing analysis requiring 800 chosen plaintexts

AES summary

- AES design is very elegant
- General performance profile is very good
- Well-suited to low-power devices
- Good performance in hardware
- Now **very** widely deployed in applications

- The selection and adoption of AES have been a remarkable success!
- **AES should be your first choice for block cipher**
  - There are scenarios where one may need to consider other options

Other block cipher examples

PRESENT

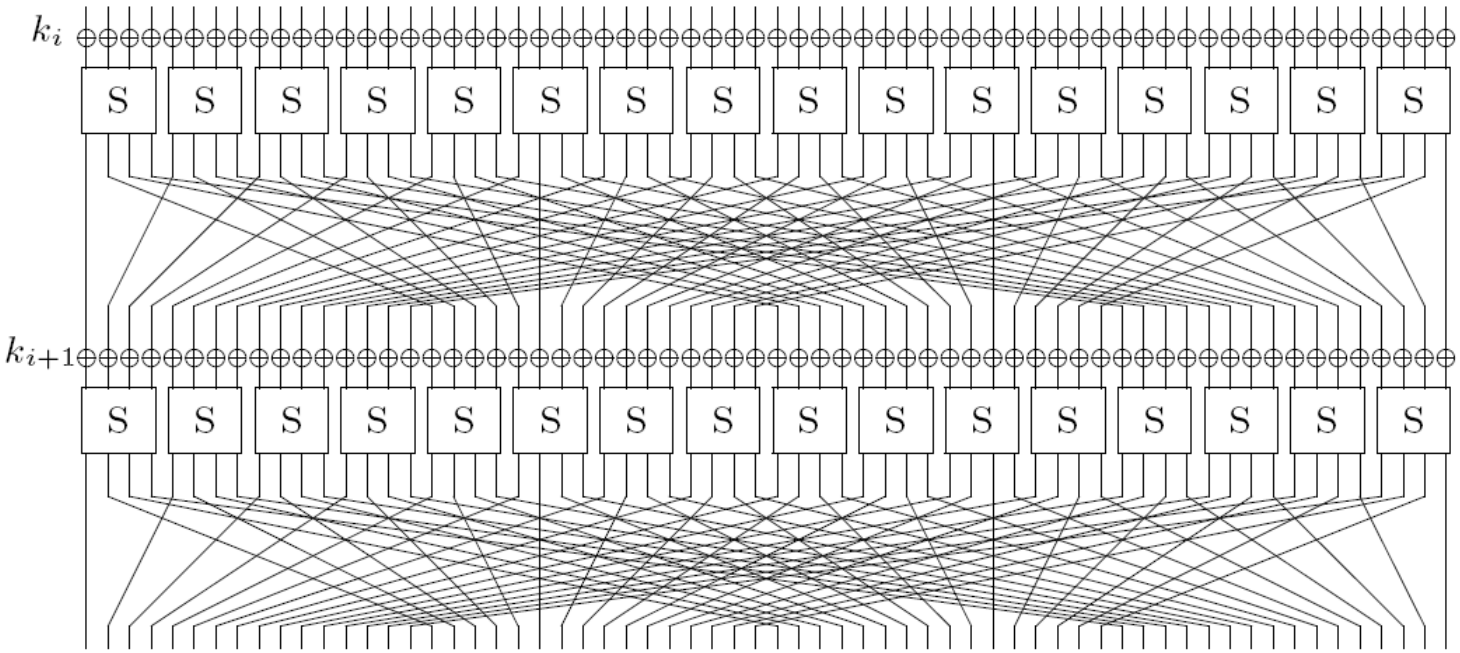

- Lightweight cipher, 64-bit blocks, 80/128-bit keys, 31 Rounds
- ISO standard for lightweight block cipher

ARX designs

- Designs using only modular Addition, Rotation and XOR (**ARX**)
- Recent examples: SIMON and SPECK (NSA 2013)

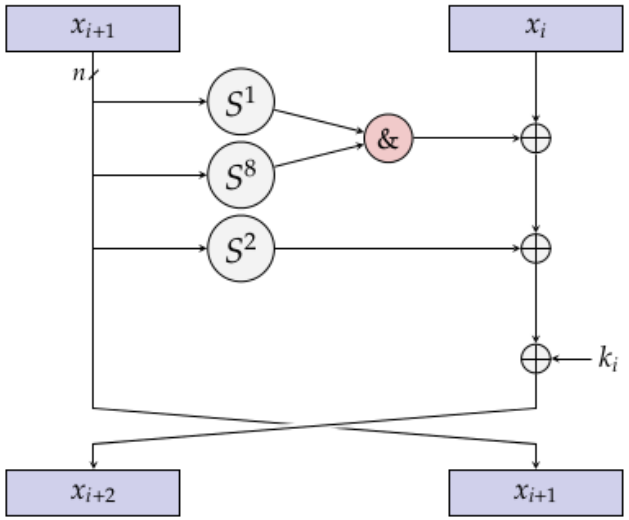

SIMON: hardware-oriented
(it actually uses AND, instead of +)

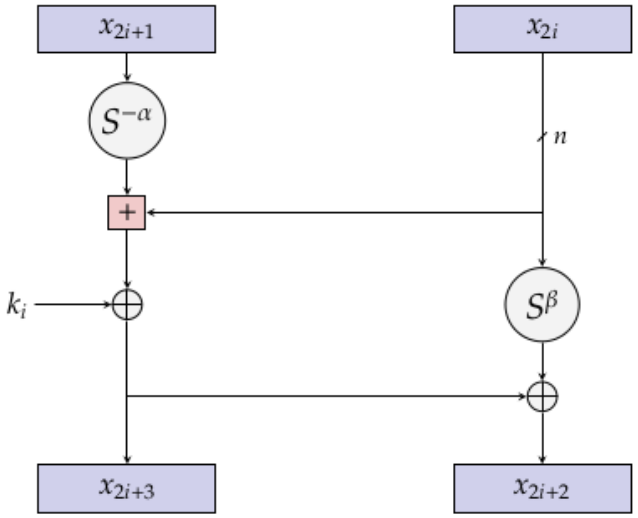

SPECK: software oriented
22-34R

Homework

- Read Sections 4.3 to 4.5 of *Everyday Cryptography*
- Read Chapter 4 (Block Ciphers) of *Serious Cryptography*
- Check this week's *Further Reading & Research* in Moodle